ABODO

WB12 90x18mm
Profile Drawing

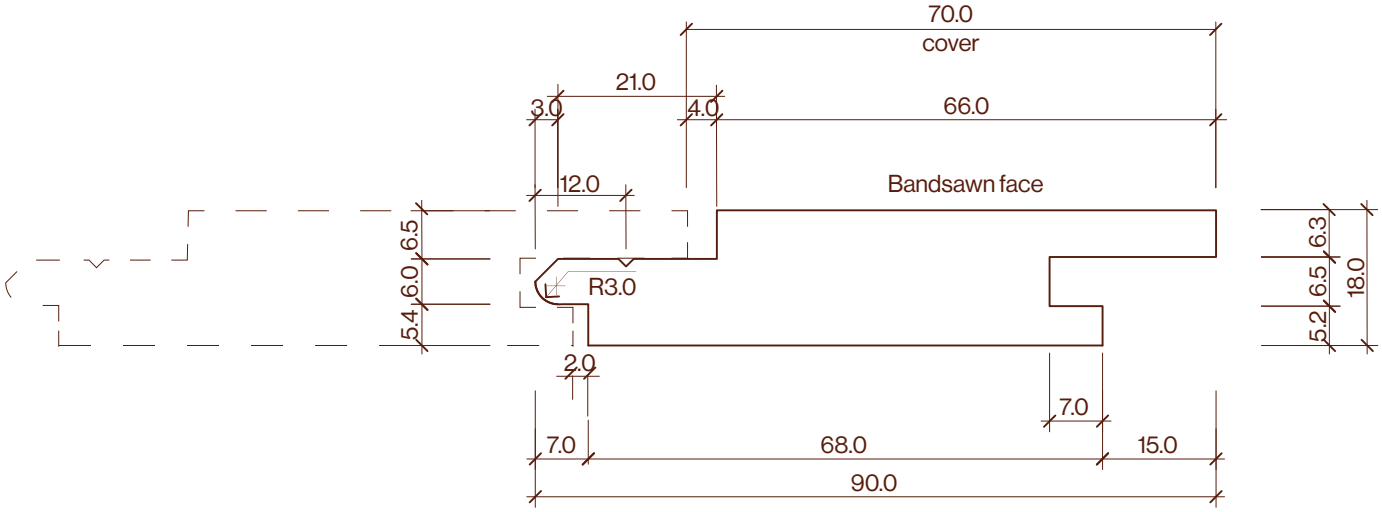

Category	Profile name	Size	Scale
Cladding	WB12	90x18mm	1:1

P +64 9 249 0100
E info@abodo.co.nz
W abodo.co.nz

Carefully Crafted Timber

© Abodo Wood Ltd 2024